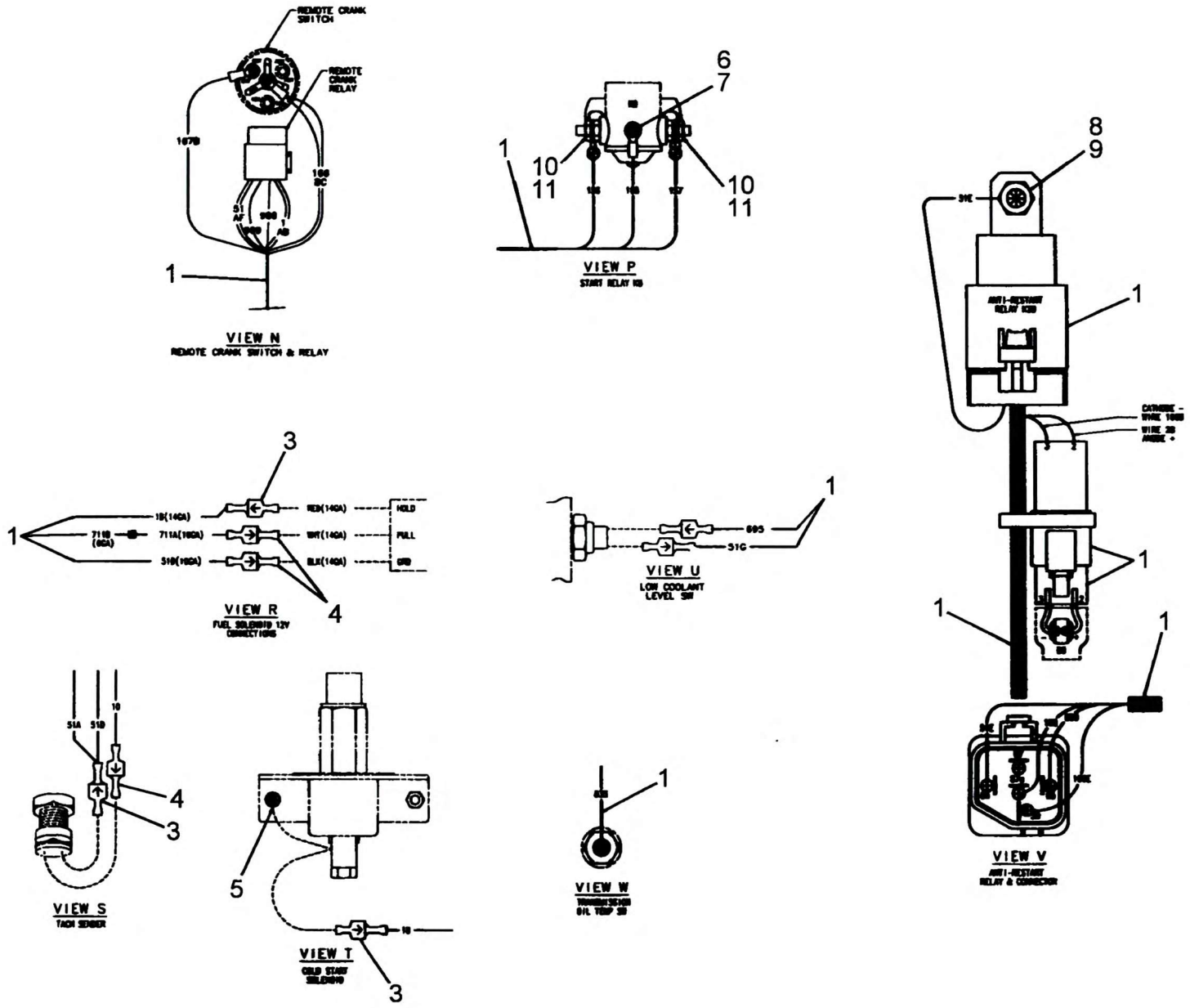
REMOTE CRANK SWITCH
REMOTE CRANK RELAY
1
VIEW N
REMOTE CRANK SWITCH & RELAY
6
7
1
10
11
10
11
VIEW P
8
9
1
1
1
1
1
VIEW V
3
1
HOLD
PULL
GRD
4
VIEW R
1
895
51G
VIEW U
LOW COOLANT LEVEL SW
51A
51B
10
4
3
VIEW S
TACH SENDER
5
10
3
VIEW T
COLD START SOLENOID
1
VIEW W

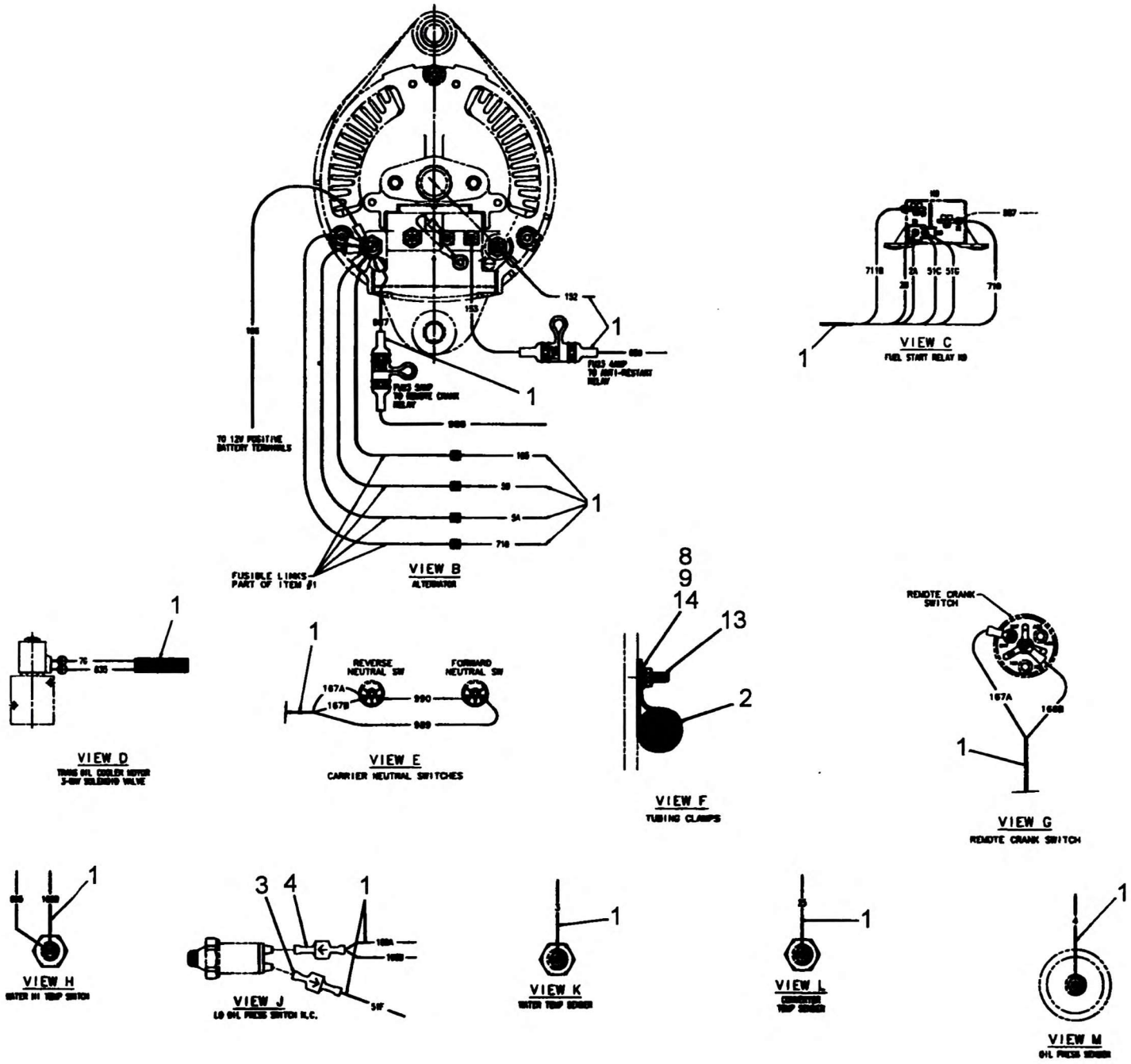
VIEW B
ALTERNATOR
TO 12V POSITIVE BATTERY TERMINALS
FUSIBLE LINKS PART OF ITEM #1
VIEW C
FUEL START RELAY NO
VIEW D
VIEW E
CARRIER NEUTRAL SWITCHES
REVERSE NEUTRAL SW
FORWARD NEUTRAL SW
VIEW F
TUBING CLAMPS
REMOTE CRANK SWITCH
VIEW G
REMOTE CRANK SWITCH
VIEW H
VIEW J
VIEW K
VIEW L
VIEW M

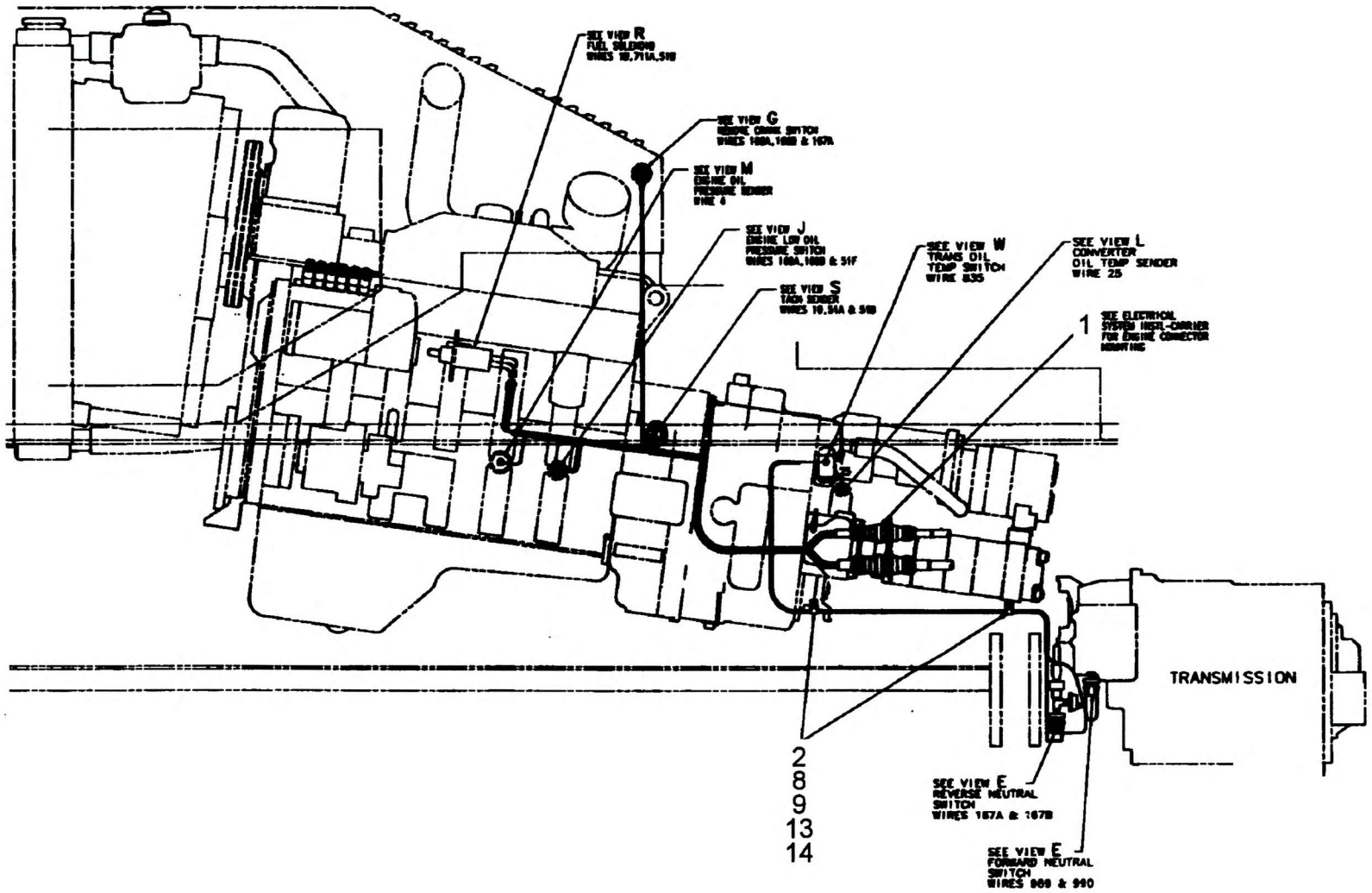
SEE VIEW R
FUEL SOLENOID
SEE VIEW G
ENGINE CRANK SWITCH
SEE VIEW M
ENGINE OIL
PRESSURE SENDER
WIRE 4
SEE VIEW J
ENGINE LOW OIL
PRESSURE SWITCH
SEE VIEW S
TACH SENDER
SEE VIEW W
TRANS OIL
TEMP SWITCH
WIRE 835
SEE VIEW L
CONVERTER
OIL TEMP SENDER
WIRE 25
1
SEE ELECTRICAL
SYSTEM HOOK-CARRIER
FOR ENGINE CONNECTOR
MOUNTING
TRANSMISSION
2
8
9
13
14
SEE VIEW E
REVERSE NEUTRAL
SWITCH
WIRES 167A & 167B
SEE VIEW E
FORWARD NEUTRAL
SWITCH
WIRES 989 & 990

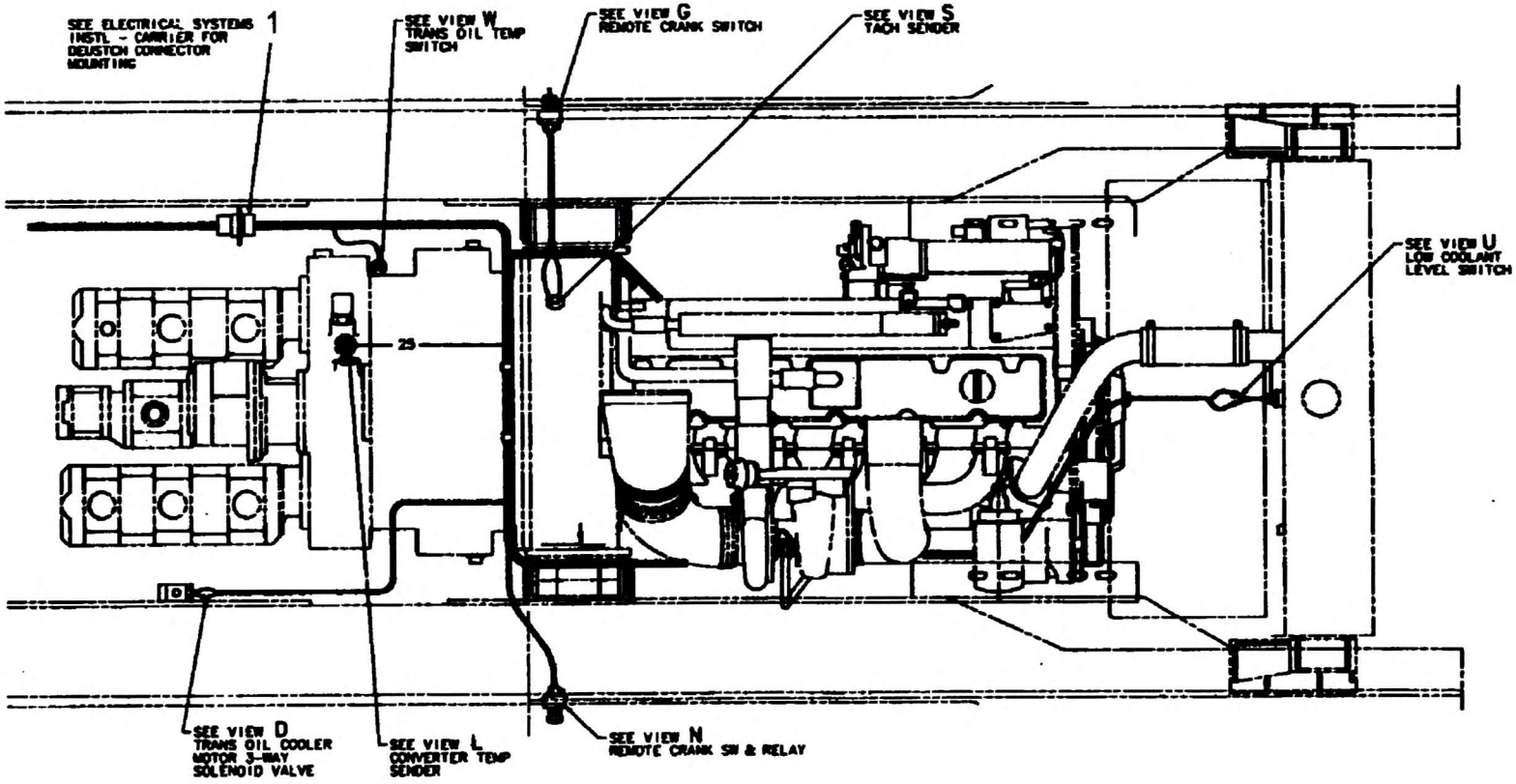
SEE ELECTRICAL SYSTEMS INSTL - CARRIER FOR DEUTSCH CONNECTOR MOUNTING
1
SEE VIEW W TRANS OIL TEMP SWITCH
SEE VIEW G REMOTE CRANK SWITCH
SEE VIEW S TACH SENDER
SEE VIEW U LOW COOLANT LEVEL SWITCH
25
SEE VIEW D TRANS OIL COOLER MOTOR 3-WAY SOLENOID VALVE
SEE VIEW L CONVERTER TEMP SENDER
SEE VIEW N REMOTE CRANK SW & RELAY

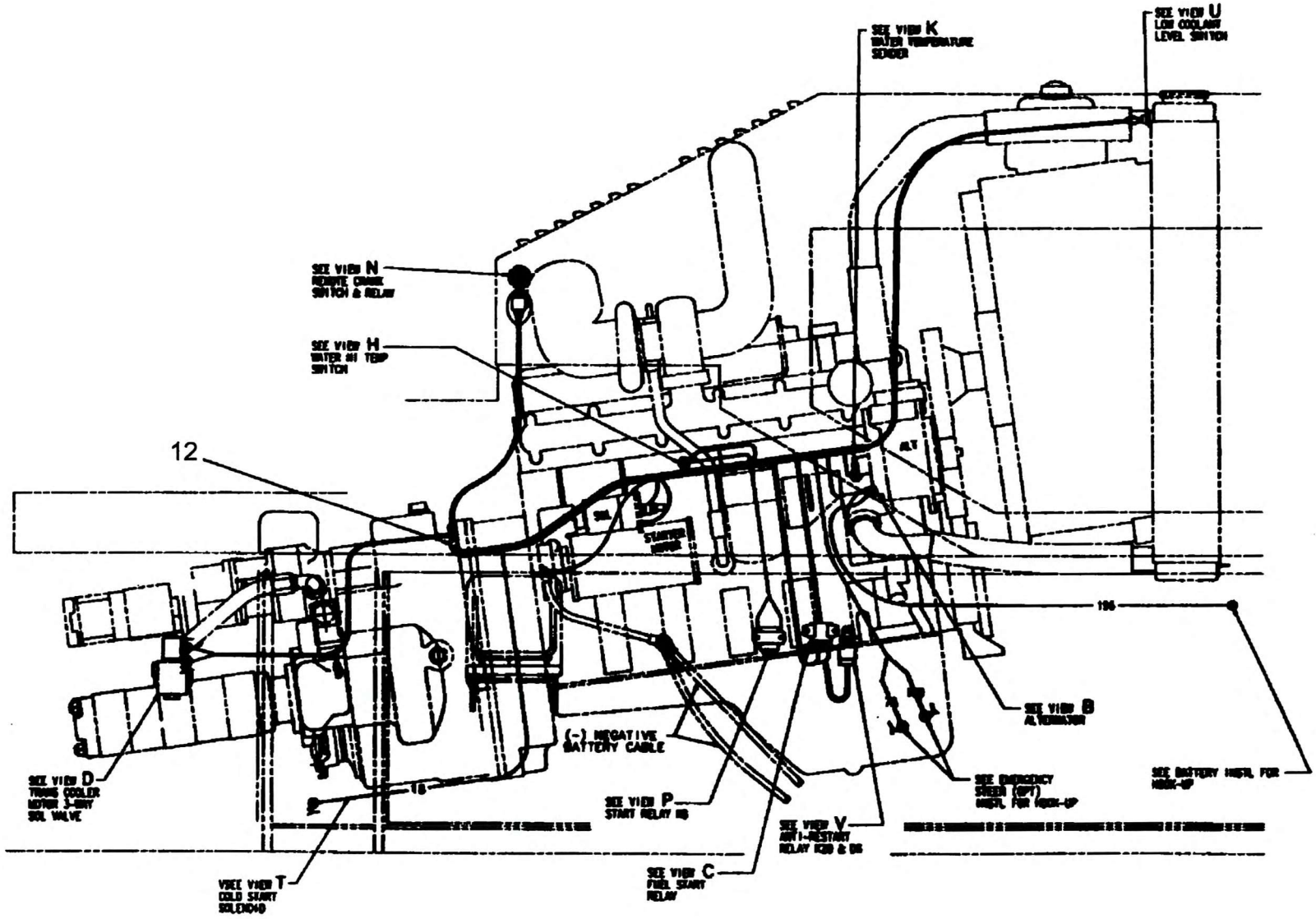
SEE VIEW K
WATER TEMPERATURE SENDER
SEE VIEW U
LOW COOLANT LEVEL SWITCH
SEE VIEW N
REMOTE CRANK SWITCH & RELAY
SEE VIEW H
WATER HI TEMP SWITCH
12
STARTER MOTOR
195
SEE VIEW B
ALTERNATOR
(-) NEGATIVE BATTERY CABLE
SEE VIEW D
TRANS COOLER MOTOR 3-WAY SOL VALVE
18
SEE VIEW P
START RELAY HS
SEE VIEW V
ANTI-RESTART RELAY
SEE VIEW C
FUEL START RELAY
VIEW T
COLD START SOLENOID